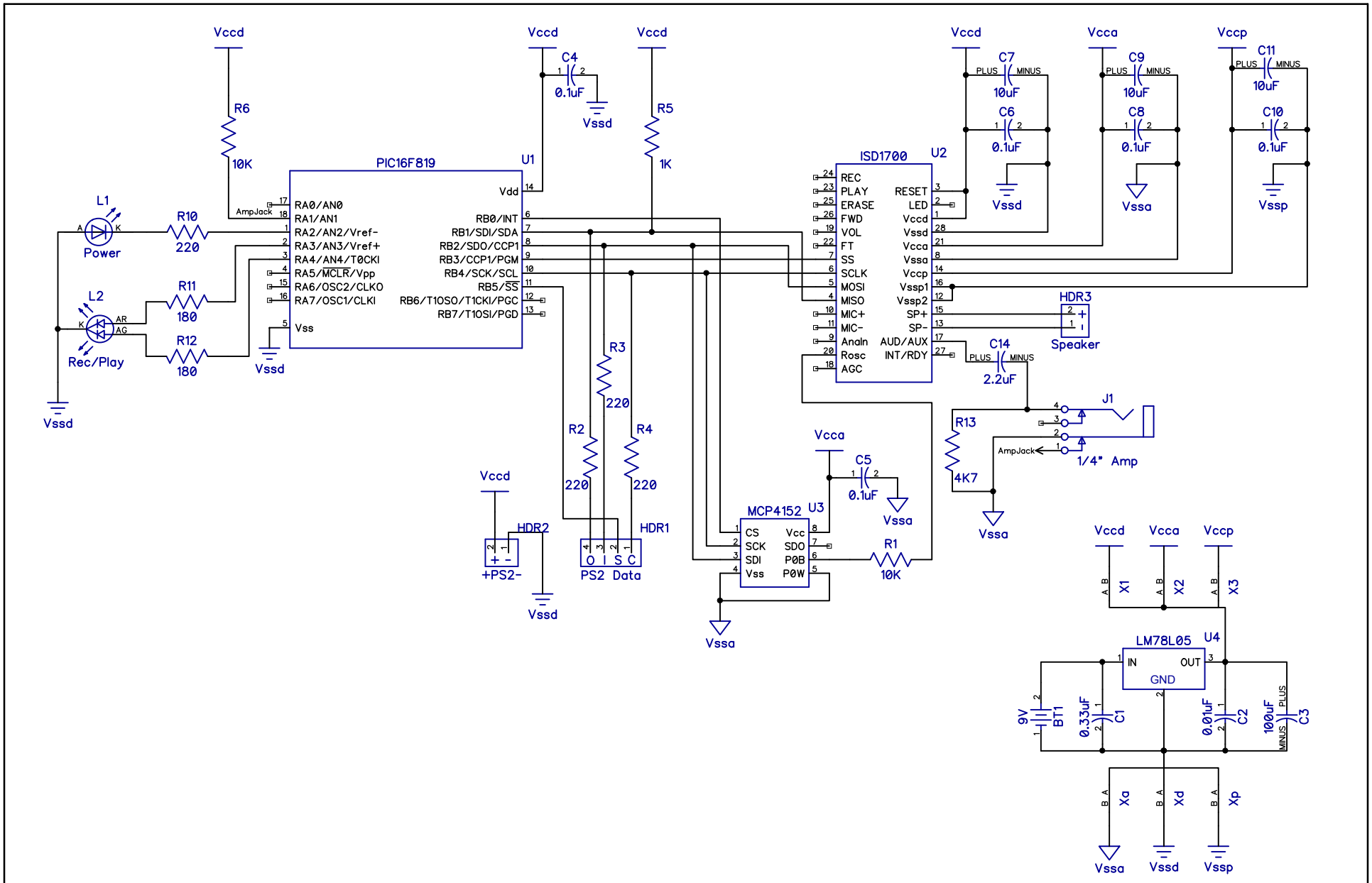

Guitar Meister		
MickeyDelp.com		
Ver 2 Rev A	2010/07/15	Page 1 of 1